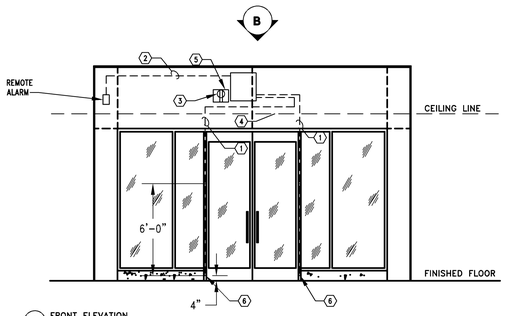

A FRONT ELEVATION
1/4" = 1'-0"

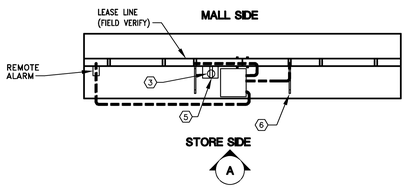

B PLAN VIEW
1/4" = 1'-0"

DIGITAL DOORMAX SENSORMATIC SYSTEM NOTES

1. INDIVIDUAL 3/4 INCH EMT CONDUIT INTERCONNECTS BETWEEN EACH ANTENNA AND POWER PACK. CONDUIT SHALL RUN IN WALL OR DOOR MULLION FROM BOTTOM OF ANTENNA (CONNECTED TO ANTENNA AT KNOCKOUT). CONDUIT ABOVE CEILING SHALL BE ROUTED CLEAR OF ACCESS OPENING. MAXIMUM LENGTH OF CONDUIT SHALL NOT EXCEED 35' FROM ANTENNA TO POWER PACK.

2. INDIVIDUAL 3/4 INCH EMT CONDUIT INTERCONNECTS BETWEEN REMOTE ALARM AND THE CONTROLLER. CONDUIT SHALL RUN IN WALL TO ABOVE CEILING AND OVER TO THE CONTROLLER.

3. DUPLEX RECEPTACLE BOX LOCATED IN AREA ABOVE CEILING. ELECTRICAL REQUIREMENTS ARE 120V. AC, THREE WIRE, DEDICATED CIRCUIT, 24 HOUR CIRCUIT WITH LESS THAN 0.5V. AC BETWEEN NEUTRAL AND ISOLATED GROUND. RECEPTACLE SHALL BE INSTALLED WITHIN 2'-0" OF POWER PACK. INSTALLATION OF POWER PACK AND PLUG IN OF POWER PACKS TO RECEPTACLE TO BE BY SENSORMATIC.

4. RETURN AIR GRILLE OR ACCESS PANEL TO BE USED FOR SERVICING OF EQUIPMENT LOCATED ABOVE CEILING. COORDINATE ROUGH-IN OF JUNCTION BOX AND RECEPTACLE WITH THE GENERAL CONTRACTOR. REFER TO MECHANICAL PLANS FOR SIZE OF ACCESS PANEL/GRILLE.

5. NEMA 1 ENCLOSURE SIZED PER N.E.C. TO ENCLOSE DUPLEX RECEPTACLE ABOVE CEILING.

6. SENSORMATIC ANTENNA. OWNER'S VENDOR SHALL MOUNT SENSORMATIC ANTENNA AT CENTER OF DOOR MULLION AT 4" A.F.F., WITH APPROVED SCREWS.

   NOTE:
   TAPE IS NOT ALLOWED TO BE USED AS A MEANS OF FASTENING THE ANTENNA TO THE DOOR MULLION.

NOTES:

1. CONTRACTOR SHALL VERIFY AN UNOBSTRUCTED MINIMUM FREE AREA OF 3 FEET VERTICALLY AND 3 FEET WIDE IN EVERY DIRECTION ABOVE THE ACCESS PANEL TO ALLOW FOR INSTALLATION OF THE DIGITAL DOORMAX SENSORMATIC POWER PACKS AND ALL RELATED REQUIREMENTS. IF FREE AREA CANNOT BE OBTAINED IN THIS LOCATION, IMMEDIATELY CONTACT THE ESD&C PROJECT MANAGER FOR FURTHER INSTALLATION INSTRUCTIONS.
2. CONTRACTOR SHALL COORDINATE THE INSTALLATION OF THE DIGITAL DOORMAX SENSORMATIC SYSTEM WITH OWNER'S VENDOR.
3. OWNER'S VENDOR SHALL VERIFY THAT THE PROPER MOUNTING EQUIPMENT IS USED TO ATTACH THE ANTENNAS. APPROVED SURFACES AND MOUNTING EQUIPMENT ARE LISTED IN THE SENSORMATIC MANUFACTURER INSTALLATION GUIDE AND SPECIFICATIONS.
4. DO NOT COIL EXCESS WIRE OR CABLE IN CEILING. DOING SO WILL CAUSE FALSE ALARMS.
5. FOR DOUBLE DOOR APPLICATIONS (6'-0" WIDE), OWNER'S VENDOR SHALL INSTALL ONE ANTENNA ON EACH SIDE OF DOORS AS INDICATED ABOVE, WITH POWER PACK, REMOTE ALARM, ETC. FOR SINGLE DOOR APPLICATIONS (3'-0" WIDE), OWNER'S VENDOR SHALL INSTALL ONLY ONE ANTENNA, ON EITHER SIDE OF DOOR, WITH POWER PACK, REMOTE ALARM, ETC. FOR ALL OTHER APPLICATIONS, OWNER'S VENDOR SHALL USE A COMBINATION OF APPLICATIONS LISTED ABOVE.

DIGITAL DOORMAX SENSORMATIC DETAIL

NTS
02DE043A2SENS

N

SYMBOL	DESCRIPTION	MANUFACTURER & MODEL NUMBER
	RECESSED DOWNLIGHT	REFER TO THIS SHEET FOR LIGHTING FIXTURE DESCRIPTION
	TRACK LIGHT	REFER TO THIS SHEET FOR LIGHTING FIXTURE DESCRIPTION
	FLUORESCENT STRIP	REFER TO THIS SHEET FOR LIGHTING FIXTURE DESCRIPTION
	FLUORESCENT STRIP (CHAIN HUNG)	REFER TO THIS SHEET FOR LIGHTING FIXTURE DESCRIPTION
	FLUORESCENT STRIP (SURFACE MOUNT)	REFER TO THIS SHEET FOR LIGHTING FIXTURE DESCRIPTION
EM	EMERGENCY FLUOR. STRIP	REFER TO THIS SHEET FOR LIGHTING FIXTURE DESCRIPTION
	FLUORESCENT TROFFER	REFER TO THIS SHEET FOR LIGHTING FIXTURE DESCRIPTION
	SCONCE	REFER TO THIS SHEET FOR LIGHTING FIXTURE DESCRIPTION
	DECORATIVE PENDANTS	REFER TO THIS SHEET FOR LIGHTING FIXTURE DESCRIPTION
X2	EXIT SIGN	REFER TO THIS SHEET FOR LIGHTING FIXTURE DESCRIPTION
X6	EXIT SIGN	REFER TO THIS SHEET FOR LIGHTING FIXTURE DESCRIPTION
XA	EMERGENCY LIGHT, SEMI-RECESSED	REFER TO THIS SHEET FOR LIGHTING FIXTURE DESCRIPTION
X	EMERGENCY LIGHT, RECESSED	REFER TO THIS SHEET FOR LIGHTING FIXTURE DESCRIPTION
$	SWITCH	
	SWITCH - MOTION SENSOR	HUBBELL ADI277W2 PASSIVE INFRARED, DOUBLE POLE, SINGLE THROW WALL SWITCH SENSOR WITH TWO SEPARATE RELAYS. WHITE COLOR FINISH.
	CEILING MOUNTED-MOTION SENSOR	HUBBELL ATD2000C DUAL TECHNOLOGY, CEILING MOUNTED OCCUPANCY SENSOR WITH SEPARATE RELAYS. WHITE COLOR FINISH.
	CEILING MOUNTED-DAYLIGHT SENSOR	HUBBELL #DHAP AND DHCM CONTROL UNIT, MOUNTING LOCATION AND SENSITIVITY SETTINGS TO BE FIELD DETERMINED
	WALL MOUNTED-VACANCY SENSOR	HUBBELL #RMS140W
D	SWITCH - DIMMER	HUBBELL S61W, SINGLE POLE, SINGLE THROW WALL DIMMER SWITCH. WHITE COLOR FINISH.
#	CURRENT LIMITER	# INDICATES AMPERAGE OF SUPPLEMENTAL BREAKER
NL	NIGHT LIGHT	
EM	EMERGENCY LIGHTING FIXTURE	
	CEILING EXHAUST FAN	GC160, 120 VOLT, 1 PHASE, 115 WATTS
	TRAFFIC COUNTER	
S2 S1	SPEAKERS	NOTE: WALL MOUNTED/CEILING MOUNTED
SW	SUBWOOFER	
SC	SECURITY CAMERA	
	VIEW MONITOR FOR SECURITY SYSTEM	

LIGHTING SYMBOL SCHEDULE

L

1. LIGHTING SHALL BE CIRCUITED EXACTLY AS SHOWN ON PLANS. CIRCUITING SHALL BE "THRU-WIRING" WHERE AND WHENEVER POSSIBLE. MULTIPLE CONNECTIONS TO A SINGLE LIGHT FIXTURE FOR VOLTAGE DROP CONDITIONS OR AS A RESULT OF A FIELD CONDITION ARE ACCEPTABLE. LIGHTING FIXTURES SHALL BE MANUFACTURED TO ACCOMMODATE "THRU-WIRING". ANY RELATED COSTS FOR MULTIPLE CONNECTIONS SHOULD BE INCLUDED IN BID.
2. ELECTRICAL CONTRACTOR'S BID SHALL INCLUDE THE INSTALLATION OF ALL LIGHT FIXTURES AND ASSOCIATED LAMPS FURNISHED BY LIGHTING PACKAGE DISTRIBUTOR. ELECTRICAL CONTRACTOR IS RESPONSIBLE FOR ENSURING THE ADJUSTABILITY OF ALL DIRECTIONAL FIXTURES AFTER INSTALLATION AND AIM THEM PER GC DIRECTION. LIGHT FIXTURE SPECIFICATIONS MAY VARY. IF THIS IS THE CASE, CONTRACTOR IS TO CALL PURCHASING AGENT WHO WILL THEN CALL THE DISTRIBUTOR FOR EXACT SPECIFICATION OF LIGHTING FIXTURES. IF THE CEILING SYSTEMS ARE FIRE RATED, ELECTRICAL CONTRACTOR IS TO CLOSELY COORDINATE FIXTURE REQUIREMENTS WITH AUTHORITY HAVING JURISDICTION.
3. EMERGENCY AND EXIT LIGHTS SHALL BE INSTALLED AND CIRCUITED PER LOCAL AND LATEST NATIONAL ELECTRICAL CODES. ALL EMERGENCY AND EXIT FIXTURES SHALL BE DUAL VOLTAGE WITH BATTERY BACK UP (120/277 VOLT INPUT). INSTALL A CENTRAL BATTERY SYSTEM WHERE THE USE OF INDIVIDUAL BATTERY UNITS ARE PROHIBITED BY LOCAL CODES. IF PLAN LOCATION IS NOT ACCEPTABLE, IMMEDIATELY CONTACT PROJECT MANAGER FOR DIRECTION.
4. ALL LIGHTING CIRCUITS UP TO 100'-0" IN LENGTH SHALL UTILIZE #12 CONDUCTORS MINIMUM. ALL LIGHTING CIRCUITS FROM 100'-1" TO 150'-0" IN LENGTH SHALL UTILIZE #10 CONDUCTORS MINIMUM. ALL LIGHTING CIRCUITS 150'-01" UP TO 250'-0" IN LENGTH SHALL UTILIZE #8 CONDUCTORS MINIMUM. CIRCUITS ABOVE 251'-0" SHALL UTILIZE #6 CONDUCTORS MINIMUM.
5. ELECTRICAL CONTRACTOR SHALL MAKE ALL FINAL CONNECTIONS AS REQUIRED FOR A FULLY COMPLETE AND OPERABLE SYSTEM.
6. IT WILL BE THE ELECTRICAL CONTRACTOR'S RESPONSIBILITY TO UNLOAD INVENTORY AND STORE LIGHTING PACKAGE. THE ELECTRICAL CONTRACTOR WILL ALSO SHIP ANY EXCESS MATERIALS BACK TO THE ELECTRICAL PACKAGE DISTRIBUTOR.
7. THE ELECTRICAL CONTRACTOR MUST INCLUDE IN THE BID TWO (2) HOURS OF START-UP TIME FOR THE LIGHTING CONTROL SYSTEM. THE ELECTRICAL CONTRACTOR WILL BE REQUIRED TO REPAIR OR REPLACE COMPONENTS FOUND TO BE DEFECTIVE. THE ELECTRICAL CONTRACTOR MUST COORDINATE LIGHTING CONTROL START-UP WITH HVAC MANUFACTURER REPRESENTATIVE. FAILURE TO DO SO MAY REQUIRE THE ELECTRICAL CONTRACTOR TO RETURN TO THE JOB SITE TO PERFORM START-UP AT A FUTURE DATE AT THE ELECTRICAL CONTRACTOR'S OWN EXPENSE.
8. EXIT/EMERGENCY LIGHTS AT STOREFRONT ARE TO BE CEILING MOUNTED AND CENTERED OVER OPENING. EXIT/EMERGENCY LIGHTS AT DOOR TO NON-SALES SHALL BE CEILING MOUNTED AND CENTERED ABOVE DOOR. IF PLAN LOCATION IS NOT ACCEPTABLE, IMMEDIATELY CONTACT THE PROJECT MANAGER FOR DIRECTION.
9. ELECTRICAL CONTRACTOR SHALL REFER BACK TO ARCHITECTURAL SHEETS FOR MOUNTING HEIGHTS OF ALL WALL MOUNTED EMERGENCY EGRESS AND EXIT FIXTURES. IF PLAN LOCATION IS NOT ACCEPTABLE, IMMEDIATELY CONTACT PROJECT MANAGER FOR DIRECTION.
10. REFER TO ARCHITECTURAL DRAWINGS FOR COORDINATION AND EXACT LOCATION OF EXIT SIGNS, EMERGENCY LIGHTING FIXTURES, SPEAKERS, DIFFUSERS, AND OTHER ARCHITECTURAL ELEMENTS.
11. ELECTRICAL CONTRACTOR SHALL MOUNT EXIT SIGN/EMERGENCY LIGHT ON CEILING OR MOUNT EXIT SIGN/EMERGENCY LIGHT TO JUNCTION BOX ATTACHED TO CONDUIT HANGING FROM STRUCTURE ABOVE IN OPEN CEILINGS. REFER TO ARCHITECTURAL SHEETS FOR MOUNTING HEIGHTS AND EXACT LOCATIONS.
12. REFER TO SHEET E05.1 FOR PANEL SCHEDULES AND LIGHTING ZONE DESIGNATIONS.
13. ELECTRICAL CONTRACTOR SHALL PROVIDE UNISTRUT AND THREADED ROD FOR ALL SUSPENDED TRACK LIGHTS, EXIT SIGNS, EMERGENCY LIGHTS AND SPEAKERS
14. GENERAL CONTRACTOR SHALL VERIFY CEILING FIRE RATING WITH ARCHITECT, AND BOX OR TENT ALL RECESSED LIGHT FIXTURES, IF REQUIRED, TO MAINTAIN CEILING FIRE RATING.
15. ELECTRICAL CONTRACTOR SHALL REFER TO ARCHITECTURAL SHEETS FOR MOUNTING HEIGHTS AND INSTALLATION DETAILS FOR SUSPENDED LIGHTING IN SALES AREA, DENIM ROOM AND NON-SALES AS APPLICABLE

LIGHTING PLAN CONSTRUCTION NOTES

J

ELECTRICAL LIGHT FIXTURE SCHEDULE

SYMBOL	DESCRIPTION	MANUFACTURER & MODEL NUMBER	HEIGHT	LAMP	WATTS	VOLTS
F9	4' CHAIN HUNG BARE LAMP T8 FLUORESCENT STRIP, ELECTRONIC BALLAST, 1 LAMP IN SECTION, WITH EMERGENCY PACK, WIRE GUARD.	MERCURY: MM-132-OCT-C-ELB-120V-EMPK-WG-MM-132, CHAIN/3FT LAMP: PHILIPS: F32T8/TL830/ALTO	3 1/4"	32 WATT, T8, MEDIUM BI-PIN BASE, LINEAR FLUORESCENT, 3000K, 85 CRI, 30,000 HRS.	32 WATTS	120 VOLTS
FK	4' CHAIN HUNG BARE LAMP FLUORESCENT STRIP, ELECTRONIC BALLAST, 1 LAMP IN SECTION. WIRE GUARD	MERCURY: MM-132-OCT-C-ELB-120V, WG-MM-140, CHAIN/3FT LAMP: PHILIPS - F32T8/TL830/ALTO	3 1/4"	32 WATT, T8, MEDIUM BI-PIN BASE, LINEAR FLUORESCENT, 3000K, 85 CRI, 30,000 HRS.	32 WATTS	120 VOLTS
N1E	1' X 4' SURFACE MOUNTED SINGLE LAMP FLUORESCENT TROFFER, PRISMATIC ACRYLIC LENS, EMERGENCY BALLAST	MERCURY: M30-132-OCT-9A-ELB-120V-EMPK LAMP: PHILIPS: F32T8/TL830/ALTO	3 3/4"	32 WATT, T8, MEDIUM BI-PIN BASE, LINEAR FLUORESCENT, 3000K, 82 CRI, 20,000 HRS.	32 WATTS	120 VOLTS
N3	2X4 LOW PROFILE RECESSED TROFFER, ACRYLIC PRISMATIC LENS, (3) LAMP T8 FIXTURE.	MERCURY: 35E-332-OCT-9A-ELB-UNI PHILIPS: F32T8/TL830/ALTO	3 3/4"	32 WATT, T8, MEDIUM BI-PIN BASE, LINEAR FLUORESCENT, 3000K, 85 CRI, 30,000 HRS.	96 WATTS	120 VOLTS
N3E	2X4 LOW PROFILE RECESSED TROFFER, ACRYLIC PRISMATIC LENS, (3) LAMP T8 FIXTURE WITH EM BALLAST	MERCURY: 35E-332-OCT-9A-ELB-UNI-EMPK PHILIPS: F32T8/TL830/ALTO	3 3/4"	32 WATT, T8, MEDIUM BI-PIN BASE, LINEAR FLUORESCENT, 3000K, 85 CRI, 30,000 HRS.	96 WATTS	120 VOLTS
T8	PAR38 SLIM STYLE GIMBAL TRACK HEAD WHITE FINISH WITH ON/OFF SWITCH LABELED 25 WATT MAX FLOOD LAMP WHITE LAMP FINISH	CONTECH: CTL838/2-P-25W LAMP: PHILIPS: 42909 19.5PAR38/F25 3000	10 1/8"	19 WATT PAR38 LED, MED BASE SOCKET 3000K FLOOD 25 DEGREE WHITE LAMP	20 WATTS	120 VOLTS
T9	SURFACE MOUNTED SINGLE CIRCUIT TRACK, WHITE FINISH	CON-TECH: LT2P, LT4P, LT6P, LT8P AS REQUIRED	11/16"	-	-	-
X2	SINGLE FACE ADJUSTABLE RECESSED OR WALL MOUNT LED EDGE-LIT EXIT SIGN WITH 90MIN BATTERY BACK UP WHITE FINISH WITH RED LETTERING ON CLEAR FACEPLATE.	CONTECH: REXA-SF-R-EM-P SUPPLIED WITH FIXTURE	11 1/16"	INTEGRAL LED	3 WATTS	120 VOLTS
X6	THERMAPLASTIC EXIT SIGN, UNIVERSAL MOUNTING CEILING/WALL, LED LAMPS AND INTEGRAL BATTERY BACK UP FOR 90 MINUTES	LIGHTALARM9: NAGLXN500R-N SUPPLIED WITH FIXTURE	-	INTEGRAL LED	4 WATTS	120 VOLTS

E

EXPRESS

EXPRESS FASHION OPERATIONS, LLC
d/b/a STORE DESIGN & CONSTRUCTION
1 Express Drive Columbus, Ohio 43230
Telephone: 614.474.4001 Express.com

PROPRIETARY AND CONFIDENTIAL
THE INFORMATION ON THESE SPECIFICATIONS WERE PREPARED FOR USE ON A SPECIFIC SITE DESIGNED BY EXPRESS STORE PLANNING, INC. AND ARE THE PROPERTY OF EXPRESS STORE PLANNING, INC. & EXPRESS FASHION OPERATIONS, LLC. THEY ARE TO BE USED ONLY FOR PROJECTS LOCATED ON SITES OWNED OR LEASED BY EXPRESS FASHION OPERATIONS, LLC OR ITS AFFILIATES OR SUBSIDIARIES OR PROJECTS WITH WHICH EXPRESS FASHION OPERATIONS, LLC OR ITS AFFILIATES OR SUBSIDIARIES HAVE ENTERED INTO A CONTRACT FOR THE USE OF THESE DRAWINGS AND SPECIFICATIONS. ANY OTHER USE, REUSE OR DISTRIBUTION OF THESE DRAWINGS AND SPECIFICATIONS WITHOUT THE WRITTEN CONSENT OF EXPRESS STORE PLANNING, INC. IS PROHIBITED.

1718

COPYRIGHT © 2014 EXPRESS STORE PLANNING, INC.
THESE DRAWINGS AND SPECIFICATIONS ARE COPYRIGHTED AND SUBJECT TO COPYRIGHT PROTECTION AS AN "ARCHITECTURAL WORK" UNDER SECTION 102 OF THE COPYRIGHT ACT OF 1990. THE PROTECTION PROVIDED FOR THESE DRAWINGS AND SPECIFICATIONS INCLUDES ALL RIGHTS AS MAY BE GRANTED TO THE AUTHOR UNDER SUCH LAW, INCLUDING BUT NOT LIMITED TO, THE EXCLUSIVE RIGHT TO REPRODUCE, PREPARE DERIVATIVE WORKS, DISTRIBUTE COPIES OR RECORDINGS, PERFORM OR DISPLAY THE COPYRIGHTED WORK PUBLICLY, AND APPLY TO CERTAIN SOUND RECORDINGS AND ARCHITECTURAL WORKS. UNDER SUCH PROTECTION, UNAUTHORIZED USE OF THESE DRAWINGS AND SPECIFICATIONS BY OTHERS WILL ENTITLE EXPRESS STORE PLANNING, INC. TO SUBSTANTIAL DAMAGES AND ATTORNEY'S FEES. THE ARCHITECT SEAL, WHICH COPYRIGHT PROTECTION ACT OF 1990, THE PROTECTION PROVIDED FOR THESE DRAWINGS AND SPECIFICATIONS INCLUDES ALL RIGHTS AS MAY BE GRANTED TO THE AUTHOR UNDER SUCH PROTECTION, UNAUTHORIZED USE OF THESE DRAWINGS AND SPECIFICATIONS BY OTHERS WILL ENTITLE EXPRESS STORE PLANNING, INC. TO SUBSTANTIAL DAMAGES AND ATTORNEY'S FEES. THE ARCHITECT SEAL, WHICH COPYRIGHT PROTECTION ACT OF 1990, THE PROTECTION PROVIDED FOR THESE DRAWINGS AND SPECIFICATIONS INCLUDES ALL RIGHTS AS MAY BE GRANTED TO THE AUTHOR UNDER SUCH PROTECTION, UNAUTHORIZED USE OF THESE DRAWINGS AND SPECIFICATIONS BY OTHERS WILL ENTITLE EXPRESS STORE PLANNING, INC. TO SUBSTANTIAL DAMAGES AND ATTORNEY'S FEES. THE ARCHITECT SEAL, WHICH COPYRIGHT PROTECTION ACT OF 1990, THE PROTECTION PROVIDED FOR THESE DRAWINGS AND SPECIFICATIONS INCLUDES ALL RIGHTS AS MAY BE GRANTED TO THE AUTHOR UNDER SUCH PROTECTION, UNAUTHORIZED USE OF THESE DRAWINGS AND SPECIFICATIONS BY OTHERS WILL ENTITLE EXPRESS STORE PLANNING, INC. TO SUBSTANTIAL DAMAGES AND ATTORNEY'S FEES.

OUTLET
SPRING 2015
140414

PROJECT INFORMATION:

EXPRESS
OUTLET MALL OF SAVANNAH
200 TANGER OUTLET BLVD.
SPACE NO.: 521
POOLER, GA 31322

SCOPE: NEW | PACKAGE:
DESIGN TYPE: DG GENERATION:
ESD&C PROJECT #: 94982 A/E PROJECT #:

REVISIONS:

REQUIRED BY:	DATE

* INDICATES NO REVISION TO THIS SHEET

M-Engineering
750 Brooksedge Blvd.
Westerville, Ohio 43081
phone: 614.839.4639
fax: 614.839.2222

ELITE CONSTRUCTION GROUP
LAKE JACKSON, TX
PHONE: 979-285-0712
NOTE: THESE PRINTS HAVE BEEN REDUCED BY 50 PERCENT. SCALE WILL BE 50 PERCENT OF WHAT IS NOTED ON PLANS

DATE ISSUED: 09/26/14
DESIGNED BY: CDH
DRAWN BY: CDH
CHECKED BY: DFG

ELECTRICAL DETAILS AND SCHEDULES

DRAWING NUMBER:
E04.1